PSC240

DC-DC Converter

PSC240-series DC/DC 210 to 240 W

Input / Output

- Optimized input voltage ranges
- Input voltage, 18 to 550 Vd.c..
- Single outputs from 12 to 110 Vd.c.
- Reverse input voltage protection.

Operation

- High efficiency.
- Operating temperature range -25 to +70 °C with no derating.
- Fully encapsulated, meets IP30 as standard.
- Convection cooled.
- Inhibit /Power Down input.
- Low voltage alarm, open collector.

Features

- Conformally coating, tropic.
- Under voltage logic alarm.
- Accesible on front panel:
  - Output voltage adjustment.
  - Output voltage measurement.
  - Output OK status green LED.

EMC

- EN 61000-6-3, Emission.
- EN 61000-6-2, Immunity.
- EN/IEC 61000-4-4, 4 kV.
- EN/IEC 61000-4-5 level 2 & 3.

Input ratings

Nominal inputs	Input range	Code
24 Vd.c.	18 to 32 V	24
48 Vd.c.	38 to 60 V	48
110, 127 Vd.c.	88 to 150 V	110
220, 250 Vd.c.	175 to 300 V	220
440 Vd.c.	350 to 550 V	440

Other input ranges on demand.

T-input for Mobile application ranges

Code	Continous range	Uin 0.1 s- S2
24T	16.8 - 30 Vd.c.	14.4 - 33.6 Vd.c.
36T	25.2 - 45 Vd.c.	21.6 - 50.4 Vd.c.
48T	33.6 - 60 Vd.c.	28.8 - 67.2 Vd.c.
72T	50.4 - 90 Vd.c.	43.2 - 100.8 Vd.c.
110T	77 - 137.5 Vd.c.	66 - 154 Vd.c.

The total output power can be derated on a T-range compared to the above output rating table.

Output ratings and type code

Output			Input					
Voltage	Current	Power	18 - 32 V	38 - 60 V	88 - 150 V	175 - 300 V	350 - 550 V	Case
12 V	17.5 A	210 W	PSC240 24/12	PSC240 48/12	PSC240 110/12	PSC240 220/12	---	12TE
15 V	14.0 A	210 W	PSC240 24/15	PSC240 48/15	PSC240 110/15	PSC240 220/15	---	12TE
24 V	10.0 A	240 W	PSC240 24/24	PSC240 48/24	PSC240 110/24	PSC240 220/24	PSC240 440/24	10TE
48 V	5.00 A	240 W	PSC240 24/48	PSC240 48/48	PSC240 110/48	PSC240 220/48	PSC240 440/48	10TE
110 V	2.18 A	240 W	PSC240 24/110	PSC240 48/110	PSC240 110/110	PSC240 220/110	PSC240 440/110	10TE

Other input and outputs combination on demand.
For compatible AC input models, please ask for PSC-AC series datasheet.

How to read our product code:
Example **PSC240 48/24**
PSC240 = Family code
48 = Input voltage code **24** = Output voltage 24 V

Features

Under voltage logic alarm
On DC-inputs a built in logic alarm changes to alarm state if the converter output voltage drops 10 % below nominal output. The DC OK LED is also controlled by the alarm circuit.
The alarm has an open collector configuration.
A voltage < 1 V is normal operating condition.
In alarm state the output can drive max 20 mA 60 V. The logic alarm works if a voltage is applied through a resistor on the collector output max voltage 60 V.
For relay output, see option B

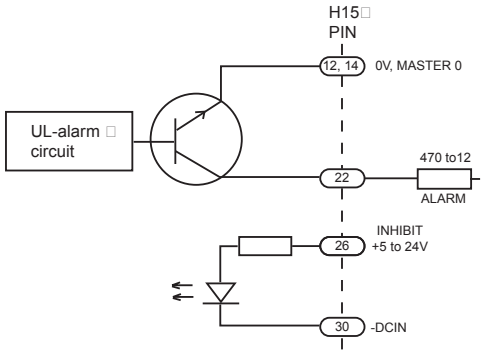

Figure 5. Open collector alarm and inhibit input.

Inhibit – power down signal
To stop the converter, an external voltage (5 to 24 V) can be put between pin 26 and input zero (pin 30), see page 3.
Do not use the output voltage to supply the inhibit.

Reverse input voltage protection
Is provided by a parallel diode on the input.
This diode is only intended to blow an external input fuse. See option K for more possibilities.

Inrush current limit
A NTC resistor is provided on models with input code 220 and 440.

Adjustment & measurement
Output voltage adjustment potentiometer and output voltage measurement points are accessible from the front panel.

Conformal coating
The PSC-series is conformally coated to withstand non-condensing tropical environment Rh 95 %.

Pin-out

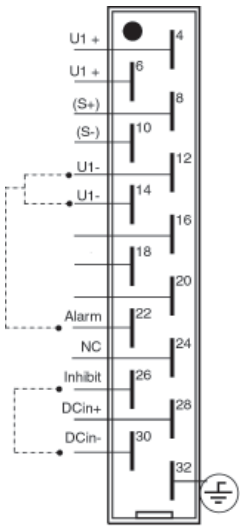

Figure 1. Pin-out single output with Connector DIN 41612, H15.

Optional Features

Overvoltage protection OVP-A
The output voltage is limited to 15 % over nominal output voltage. A SCR short-circuits the output. It is reset by switching off the input or by an Inhibit signal.The OVP circuit is a standard feature on 5 V outputs, which triggers at 6.2 V

Undervoltage alarm with relay -B
The standard under voltage logic alarm circuit output is replaced by a relay fault signalling output.

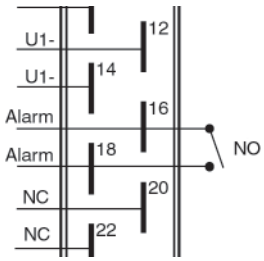

The relay logic is NO (Normally Open) in alarm state. (Alarm state = no input or low output.) The relay rating is 30 V 0.5 A (a.c. & d.c.) Connect according to figure between Pin 16 and 18 on the H15 connector.

On PSC240 440 input code models the user can select NO or NC function. Then pin 20 is also used.

Built in series diode -C
A series diode on the output, which is mounted inside the case. Use this option when output is connected in parallel with other power supplies to achive redundancy.

Built in series diode with resistor - CR
The CR option automatically balance the load between 2 or more paralleled PSC units.

Remote sense -S
The voltage sensing can be put at the load to compensate for voltage drop.

Inrush current limit with NTC
Reduce the inrush current during start up. The input voltage range might be affected.
This feature or option is not recommended for stand-by operation (One supplies the load and the other is used as an idling back-up). The stand-by unit might not be able to supply enough current until the NTC warms up.

Input diode for reverse voltage protection - K
Parallel diode reverse protection is a standard feature.
K1. Reverse protection with a series diode on the input. The input voltage range is affected with 1 V higher start/stop voltage. On 24 and 48 this option derates the output power by the increased heat losses produced by such diode. Contact factory for details.
K2. Addition of a glass fuse. Can not be used on higher inputs than 180 Vd.c.

2.5 kVa.c. isolation Input/case -E1
On 24 and 48 inputs. The emission level increase to level A.

2.5 kVa.c. isolation Output/case -E2
The emission level increase to level A.
Euro panel -L, 12TE see figure 7

Wall mounting panels -N, see figure 8 & 9
Includes H15 connector holder. The female connector has to be added. To mount on a DIN TS-35 rail, we can supply an optional DIN rail clips

Connector Options

H15 female Screw Connector H15-S

FastOn 6.3mm Connector H15-T

DIN-rail Clips

Weight 1.2 kg

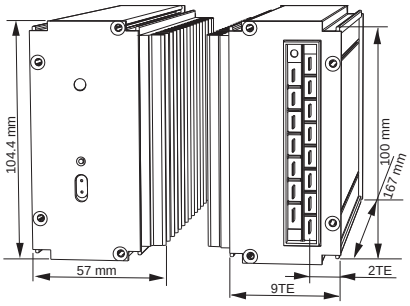

Figure 6. Front and connector side of PSC240

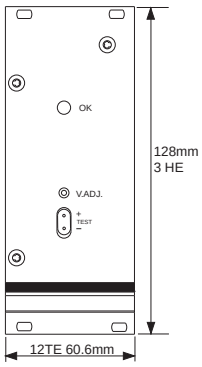

Figure 7. 12TE Front panel 3HE option L

Weight 1.3 kg

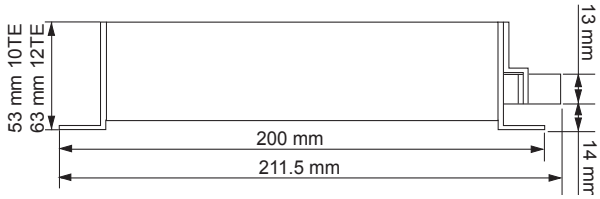

Figure 8. Side view on wall mounting option N

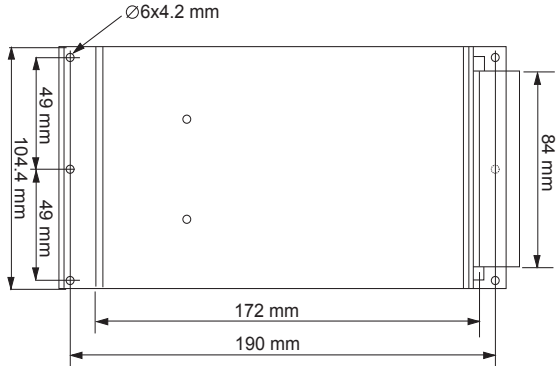

Figure 9. Top view on wall mounting option N

The PSC-family are built in a tubular aluminium extrusion, with high thermal conductance which also work as a good EMC shield. The mechanical design permits use in vehicles and heavy industrial environments. The IP class is IP30. On special demand up to IP54 can be supplied using special connectors.

Vibration and shock resistance is high in standard DIN 431605: 6 g 10 ms (5000 times in 3 directions) Higher as 15 g 50 ms or 30 g 10 ms can also be provided on demand.

General data DC/DC Converters

Design topology	Push-Pull
Switching frequency	50 kHz
Emission / Immunity	See page 7
Safety EN/IEC 60950	Class I
Max accepted input ripple 50 - 400 Hz	1 % of nom. voltage
Power consumption at no load	3 to 5 W
Reverse input voltage protection	Parallel diode
Inrush current limit with	
Input code 24, 48	No
Input code 110	Optional NTC
Input code 220, 440	Yes with NTC
Insulation	See page 4

Output data

Source regulation	0.2 %
Load regulation (0 to 100 % load) master	0.2 %
Transient recovery time for a load step of 10 to 100% voltage deviation	<2 ms 3 %
Output ripple (50 kHz) Vp-p[2]	Typ. 10 mV
Input ripple attenuation on output 50 to 400 Hz	150:1
Emission / Immunity	See page 4
Temperature coefficient	0.02 %/°C
Min output adjustment range adjustable with a 15 turn potentiometer	90 to 110 %
Current limit, rectangular.	105 %
Remote sense	Option S
Soft start	Yes
Isolation output / case	See page 4
Start-up time	1 s
Hold-up time, contact factory	2 - 25 ms
Efficiency[3]	80 - 91 %
Operating temperature range at 100 % load. Conduction cooling.	-25 to +70 °C
Storage temperature range.	-40 to +85 °C

2. Output ripple might increases when EN/IEC 61000-4-3 10 V/m test is applied to max 0.5 % V_{RMS}
3. Lowest efficiency measured within the whole input voltage range at 100 % load.

Safety standard IEC60950

Isolation testable levels	Input code	
	24, 48	110, 220, 440
Input / Output	2 kVd.c.	2.5 kVa.c. / 4 kVd.c.
Input / Case	2 kVd.c.	2.5 kVa.c. / 4 kVd.c.
Output / Case all outputs	2 kVd.c.	2 kVd.c.
Master output / Auxiliary outputs	2 kVd.c.	2 kVd.c.
Alarm / Input	2 kVd.c.	2.5 kVa.c. / 4 kVd.c.
Isolation, not testable level Safety isolation		
Transformer isolation In / Out	2 kVd.c.	4 kVa.c. / 8 mm

We use the product standard Low voltage power supplies, DC outputs EN/IEC 61204-3 and the generic EMC standards:
EN/IEC 61000-6-2 (Immunity)
EN/IEC 61000-6-3 (Emission)

EMC

EMC-standards	EMC-performance		
Emission standrads	**Input**	**Output**	**Remarks**
EN 55011/EN 55022 (0.15-30 MHz)	Level B	Level B	
EN 55011/EN 55022 (30-1000 MHz)	Level B		Enclosure test
Immunity standards	**EN/IEC 61000-6-2**		
EN/IEC 61000-4-2	8 kV / 15 kV		Contact / air, Enclosure test
EN/IEC 61000-4-3	10 V/m AM-Modulated		Output ripple can increase to 0.5 % of Vout. Enclosure test
EN/IEC 61000-4-4	4 kV	4 kV	
EN/IEC 61000-4-5, Input code 24, 48 EN/IEC 61000-4-5, Input code 110[1], 220[1], 440[1]	0.5 kV / 1 kV 1 kV / 2 kV	0.5 kV / 1 kV 0.5 kV / 1 kV	Line-line 2 Ω / Line-case 12 Ω
EN 50121-3-2/IEC 62236-3-2	1 kV / 2 kV	1 kV / 2 kV	Line-line 42 Ω / Line-line 42 Ω
EN/IEC 61000-4-6	10 V_{RMS}	10 V_{RMS}	AM-Modulated
EN/IEC 61000-4-8	Not sensitive		Enclosure test
EN/IEC 61000-4-10	Not sensitive		Enclosure test

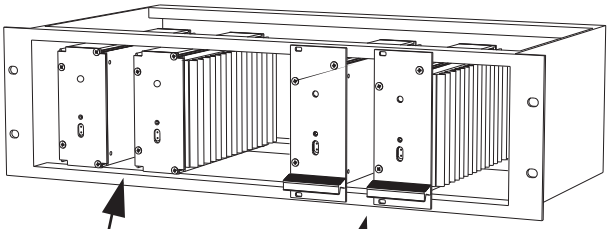

PSC mounted in a 19” Sub-rack. Standard unit.

PSC mounted in a 19” Sub-rack with L panel (Optional)

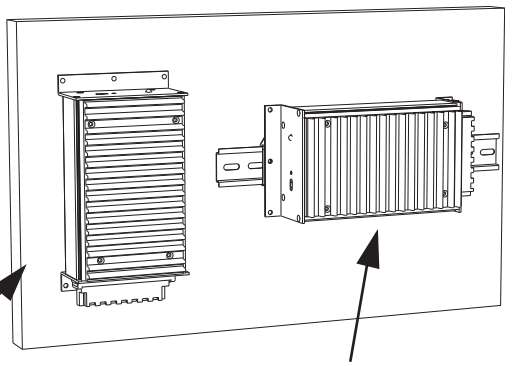

PSC wall mounted. Using PSC wall mounting kit including connector holder.The female H15 connector is optional. See page 5 for the selection.

PSC DIN-rail mounted. Using PSC wall mounting kit with H15 connector, connector holder and DIN-rail clips (Optional).

Contact

For updates on this datasheet we refer to www.polyamp.com
Specifications subject to change without notice.

Switch Craft S.A. Ruel bel Air 63
CH-2300 La Chaux-de-Fonds Switzerland
Telephone: +41 32 96 78800 Telefax: +41 32 96 78809
E-mail: terranova@switchcraft.ch

Polyamp AB Box 229 597 25 Åtvidaberg Sweden
Telephone: +46 120 854 00 Telefax: +46 120 54 05
E-mail: info@polyamp.se

Distributor