Installation Manual
DC/DC converters
PSC80, PSC100, PSC150, PSC240

PSC80, PSC100 & PSC150

PSC240 & PSC150 with T3

Polyamp AB
Box 925
191 29 SOLLENTUNA
Sweden

www.polyamp.com
info@polyamp.se
Tel: +46 859469300
Tel: +46 859469305

EU VAT no SE556103276301
DUNS no 35-430-3372
CAGE S4231
NCAGE S4231

Warranty

All Polyamp DC/DC converters are warranted against defective material and workmanship. This warranty is valid for 24 months from the date of delivery. We will repair or replace products which prove to be defective during the warranty period. The warranty is valid only if the converter is used within specification.

Manual

This manual is as complete and actual as possible at the time of printing. However, the information may have been updated since then. Polyamp AB reserves the right to make changes in this manual without notice.

The exclamation point within an equilateral triangle is intended to alert the user to presence of important operating and maintenance instructions in the literature accompanying

The lightning flash with arrowhead, within an equilateral triangle, is intended to alert the user to presence of un-insulated ”dangerous voltage” within the products enclosure that may be of sufficient magnitude to constitute a risk of electric shock to persons

Caution!

To prevent the risk of electric shock, do not open enclosure. No serviceable parts inside. Refer servicing to qualified service personnel only

CE

We supply a separate declaration of conformity within our shipment that mainly refers to the Low voltage directive and EMC directive.

 Copyright 2000-2011

CONTENT

1 Before installation 4
1.1 Cable and pin dimensioning 4
1.2 Reverse input voltage protection 4
1.3 Input fuse 4
1.4 Build-in fuse, option K2 5
1.5 Inrush current limit 5
1.6 Series diode on input, option K1 5
2 Installation 6
3 Several output voltages 7
4 Parallel connection 7
4.1 Series diode on the output, option C 7
4.2 Series diode with series resistor, option CR 7
4.3 Output under voltage alarm 7
4.4 Connecting systems in N+1 configuration 8
4.5 Connecting converters in parallel on the output 8
4.6 Adjusting output voltage when units are paralleled on the output 9
5 Multiple loads at the output 9
5.1 Short-circuits 9
6 Output voltage sense, option S. 10
7 Output over voltage protection OVP 10
7.1 Standard feature 10
7.2 OVP option A 10
8 Output low voltage alarm 11
8.1 Logic signal alarm 11
8.2 Relay output alarm, option B 11
9 Inhibit input, remote switch off 11
10 Higher isolation voltage, option E1 & E2 11
11 Insulation voltage test 12
11.1 DC isolation test output to case 12
11.2 AC isolation test output to case, option E2 12
11.3 DC isolation test input to output and input to case 13
11.4 AC isolation test input to output and input to case 13
12 Trouble shooting 14
12.1 There is no or wrong output voltage 14
12.2 The input fuse blows when the input is connected 14
12.3 The converter starts and stops repeatedly 14
12.4 Fault report 14

 Copyright 2000-2011

1 Before installation

Before installation, please read this section and minimum section 2. This installation manual shall also be read together with the datasheet of the product. Download the datasheet from www.polyamp.com and check the File archive where in section Datasheet you will find PSCDC.pdf and PSC240.pdf.
If any problem occurs during installation please check *section 12 Trouble shooting.*

The product is labelled as below example:

PSC240 110/24 Input range: 88 – 150 Vd.c.; 3.3 A Output: 24V 10A Option: L, C

The DC/DC converter type name consists of model name PSC80, PSC100, PSC150 and PSC240 followed by input code and output voltage. Two examples:

- **"Type: PSC150B24"** has input code **"B"** and nominal output voltage **24Vd.c.**
- **"Type: PSC240 110/48"** has input code **"110"** and nominal output voltage **48Vd.c.**

The **Options** are block letters separated by comma(,). You will find explanation within this manual what the letter code means.
The **input** states the nominal input voltage and **maximum input current** at any conditions. It means the output is adjusted +10% above nominal voltage and close to the current limit, which is the stated output current +5% and a lowest input voltage level.
Input range is the input range that the unit can operate normally.
Output indicates the nominal output voltage and the rated current.
The output is current limited with a so called rectangular characteristic. When the current limit is reached, which is adjusted to +5% of above mentioned nominal output current, this is the maximum current that will continuously flow. The output voltage drops very quickly down towards zero volt (depends on the series resistance of the load circuit as the unit can be regarded as a constant current generator at over current condition). We have no time limit on over current condition.

Temperature range is the rated operation temperature at 100% load condition.

Input, output and case are galvanically separated from each other. This is a **Class I insulation system**, which is dependent of correct earth connection on the input.
All outputs are insulated from case with minimum 2000Vd.c. *Section 11 Insulation voltage test*, describes the insulation rating depending on input voltage. See *section 10* if higher insulation is required.

Series number is stamped on the panel under the connector

1.1 Cable and pin dimensioning

The PSC series is using a DIN 41621 H15 connector intended for 3HE Euro format mounting. Each pin has a continuous current rating of 15A @+55°C and 12A @+70°C ambient temperature.
The **U1 pins** are internally parallel connected and can therefore supply more current or two different loads. If the unit is equipped with sense option S this must be connected to one of the loads or a distribution point.

1.2 Reverse input voltage protection

The input is protected against reverse polarity by a parallel diode on the input on all models. The parallel diode is dimensioned to blow a fuse.
Reverse voltage protection with series diode, see *section 1.6 Series diode on input, option K1.*

1.3 Input fuse

The input should be fused with an approved fuse with a slow blow characteristic and high breaking capacity. Select a stand current rating equal or above the below specified value, see *Table 1* & 2. With option K2 we can include fuse on some models.

 Copyright 2000-2011

Input voltage code	PSC50	PSC80	PSC100	PSC150
A	8 A	12.5 A	16 A	20 A
B	4 A	6.3 A	8 A	12.5 A
CT	2 A	2.5 A	3.15 A	6.3 A
C	1.4 A	2.5 A	3.15 A	5 A
D	0.8A	1.25 A	1.6 A	2.5 A
E	---	---	1.0 A	1.25 A

Table 1. *Recommended input fuses.*

PSC240 input fuses	
Input voltage code	Slow blow fuse
24	15 A
48	8 A
110	4 A
220	2 A
440	1 A

Table 2. *Recommended input fuses.*

There are two reasons we do not include an input fuse.

1. DC-networks should be fused at the distribution point to protect the cable.
2. Different applications require different types of fuses.

1.4 Build-in fuse, option K2

On input code A, B, CT, C, 24, 48 and 110 a fuse can be integreated. For higher input voltages external fuse must be used.

1.5 Inrush current limit

The input capacitors are charged through an NTC resistor to reduce the input current during start up. On input code D, 220 and E, 440 the NTC resistor is standard.

With **Option H** the NTC resistor can be provided on models with input codes B, CT, C, and 110. It will affect the input voltage range. All models has an ”output soft start” that do not increase the input current above the unit rated current during start up (approx. 0.1s).

Start-up behaviour with NTC on DC inputs.
The input voltage rating range is changed when a NTC resistor is used, see *Table 3*.

This is because if the load changes from 0 to 100% abruptly, the input current also changes abruptly. This will cause a voltage drop across the NTC resistor (until it heats up). If the input voltage is only slightly higher than the start voltage of the converter this voltage drop will cause the converter to stop. The converter will then starts and stop several times until the NTC resistor is heated up. We have therefore increased the lowest input voltage on units with a NTC resistor so this behaviour not arises.

PSC (standard input voltage range)	
Input voltage code	**Input voltage range**
B	20 - 60 Vd.c.
C	50 - 150 Vd.c.
D	90 - 270 Vd.c.

PSC input range with option H	
Input voltage code	**Input voltage range**
B	30 – 60 Vd.c.
C	75 – 150 Vd.c.
D	115 – 270 Vd.c.

Table 3. *Input voltage range with and without option H*

The unit starts if the voltage is within the normal input voltage range, but depending on the load (if the NTC is heated up) a load change might cause the converter to stop and start as described before.

1.6 Series diode on input, option K1

Series diode on input is used of two reasons; as reverse voltage protection and if hold-up time is specified. Depending on input voltage the unit will be derated due to the diode losses. A series diode as reverse voltage protection is recommended if long distance between input fuse and unit input (>3 m).

 Copyright 2000-2011

2 Installation

The converter is designed to be mounted in a 3HE 19” sub rack unit. Otherwise a location only accessible for service, which meets the demand of EN60950 regarding fire enclosure, voltage hazard protection and mechanical strength, shall be used.

With option N, wall mounting set you can mount the converter in any direction on a wall or with optional mounting clips on DIN rail TS35. The converter is convection cooled and in order to get sufficient cooling there shall be a free air around the converter. If this is not possible, we recommend the use of an external fan. On 5 V single output voltage the case temperature might increases +20°C above ambient temperature. An optional extra cooler, called T3, can be provided on 5V versions to lower temperature or increase the operating temperature range. PSC150 and PSC240 cannot have this option.

Note that the expected life of the converter is dependent on converter temperature. For every 10°C that the temperature is lowered the expected life is approximately doubled. It is therefore crucial to cater for good ventilation and if possible to reduce ambient temperature.

To meet the EMC specifications in the enclosed ”declaration of conformity” use twisted-pairs for connecting input, output and alarm. Shielded cables are not necessary.

If the converter supplies a DC-motor, we recommend an external parallel diode at the motor poles to protect against reverse voltages.

Installation in a 3HE 19” Euro sub rack:

1. Check the pin-out, *see Figure 2*. Connect the protective earth pin 32. This provides safety against electrical shock and is required to achieve EMC performance according to the declaration of conformity.
2. Be aware that if the sense option ”S” is provided the sense must be connected to the sensing point and cannot be left open, *see section 6.*
3. Plug in the unit. Go to point 3 next page.

Figure 1. *Front panel option L, 10TE & 12TE*

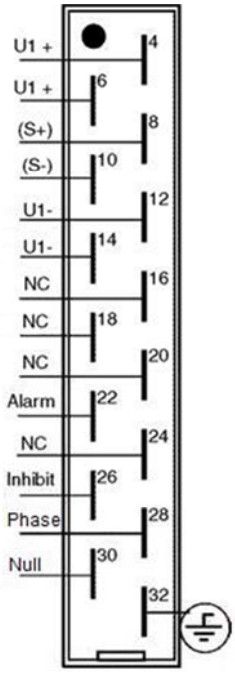

Figure 2*. Standard Input and Output pin-out on DIN41612 H15 connectors.*

Installation with wall mounting panel option N:

1. Check the pin-out, *see Figure 2*. Connect protective earth pin 32. This provides safety against electrical shock and is required to achieve EMC performance according to the declaration of conformity.
2. Connect the output. Be aware that if the sense option ”S” is provided the sense must be connected to the sensing point and cannot be left open, *see section 6.* Bundle the output cables together, separate from input.

 Copyright 2000-2011

3. The converter output is short-circuit proof by a constant current limit which works unlimited in time. Therefore there is no need to fuse the load (unless you use multiple loads, see below). The current limit is fixed to 105% of nominal output current.

4. **Features and options**
   - If the converter is to be connected in parallel at the output, please consult section *4 Parallel connection, on this page.*
   - If you use multiple loads, please consult section 5 *Multiple loads at the output, page 9-10.*
   - If you intend to use alarm feature, please consult section *8 Output under voltage Alarm, page 11.*
   - The output over voltage protection OVP limit is set +15% of nominal output. See also section 7.2 *OVP option A page 10.*
5. Connect the input cables. Bundle input cables together separated from the output cables.
6. Start the converter by connecting the input voltage.

Beware of hazardous voltages!

The output voltage can be adjusted ±10% of nominal output voltage with the potentiometer marked V.ADJ on the front panel. Clockwise turn increases the output voltage. The potentiometer has 15 turns. If you have connected units in parallel on the output, the procedure of adjusting the output voltage is described in section *4.5 Adjusting output voltage when units are paralleled on the* output on page 8.

3 Several output voltages

The PSC series models PSC80, PSC100 and PSC150 can be supplied with one or two auxiliary outputs. This manual regards only single output models. There is a supplementary manual for two or three outputs.

4 Parallel connection

If a redundant power supply system is requested, two or more converters can be connected in parallel. To achieve redundancy the number of converters must be dimensioned to carry the whole load even if one converter is faulty. The option C or CR series diode on the output must be provided. Connect your load to the + output after the series diode (cathode).

Another reason for connecting two or more converters in parallel is to get more power. The option C must be provided. When the series diode C or CR option is used the *Sense option S, see section 6 page 10*, cannot be used.

4.1 Series diode on the output, option C

A series diode is necessary if the output is connected in parallel with another power supply or if you require redundant operation. If a converter breaks down with an internal short-circuit on the output and other converters are connected in parallel on the output, the broken unit will short-circuit the others if the series diode is not used. This might cause excessive heat or even fire in the faulty unit.
The series diode protects the converter output from external voltage sources.

4.2 Series diode with series resistor, option CR

This option is an extension of 4.1 Series diode. When several PSC units are connected in parallel with so called “hot plug in” in 19” sub-rack, a built in series resistor and series diode is provided that will automatically balance the current between units.
The series resistor will provide the Ud function described in *section 4.5 and figure 5*. Thus no special cable arrangements are needed with this CR option.

4.3 Output under voltage alarm

If one DC/DC converter fails in a redundant power system an alarm signal should be detected.
The PSC has a logic open collector alarm to provide a logic signal. An optional relay dry contact output, *see section 8 page 11.*

 Copyright 2000-2011

4.4 Connecting systems in N+1 configuration

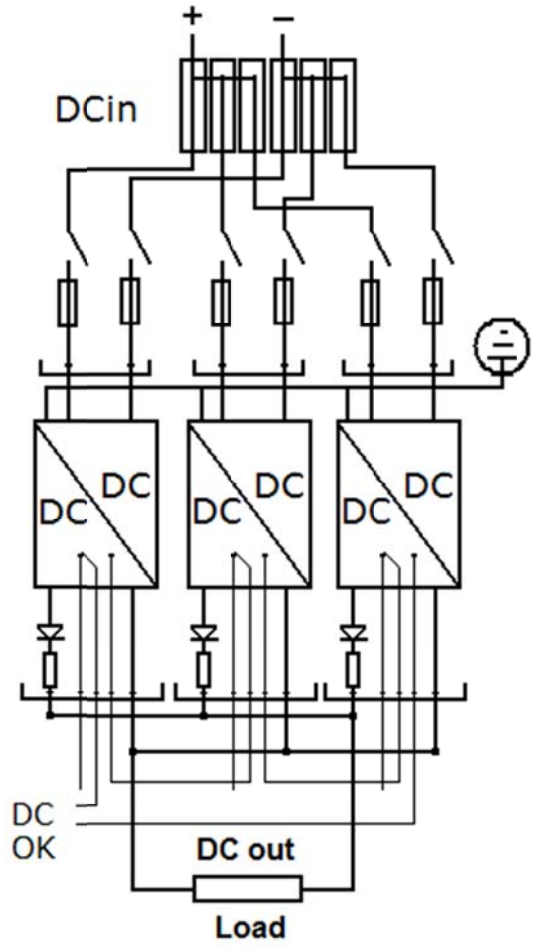

Figure 3. *An N+1 system with two units for the load and one for the redundancy.*

The figure 3 shows a N+1 system with two units for the load and one for the redundancy. Each Power supply has a built in; series diode (C), balancing resistor (R) and alarm Relay option B. The alarm is cascade connected. Note that each DC/DC converter has individual external input fuses.
With the CR option a hot plug-in can be achieved if the output voltage is correctly adjusted. Use instruction in *section 4.6 -3 below.*

4.5 Connecting converters in parallel on the output

The expected life of the converter is dependent on converter temperature. It is therefore important for paralleled unit to share the load as equal as possible to reduce the converter temperature. To achieve good current sharing the converters must have separate cables to the load. The cables should be dimensioned to have a voltage drop, Ud, between the converter and the load at maximum current capacity, *see Figure 4 and Figure 5.*

- When the series diode is used, which we recommend, the voltage drop should be approximately 1.0% of nominal output voltage (to also compensate for the negative temperature coefficient of the diode).
- When the series diode is **not** used**, this is not recommended,** the voltage drop should be approximately 0.5% of nominal output voltage.

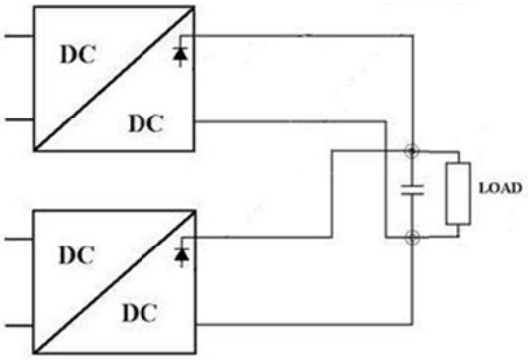

Figure 4. *Parallel connection, with optional capacitor.*

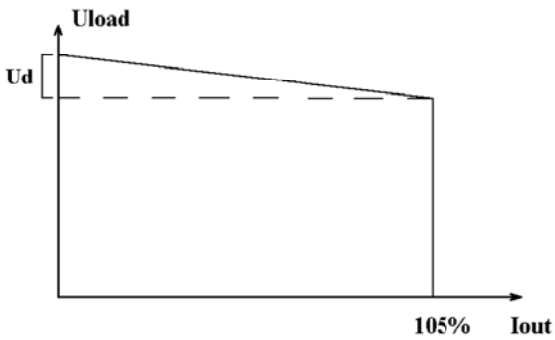

Figure 5. *Load regulation with voltage drop Ud between output and load*

Note that the voltage drop affects the load regulation (the voltage at the load), *see Figure 5.*

 Copyright 2000-2011

4.6 Adjusting output voltage when units are paralleled on the output

1. Connect and start all converters according to *Installation* on page 4. We recommend using the series diode and separate cables as mentioned above in *4.5 Connecting converters in parallel on the output* or the *CR option 4.2*.

2. Measure the voltage at the load. Connect voltmeters as showed in *Figure* 6. If you have only access to one voltmeter you must move it around to make the adjustments.

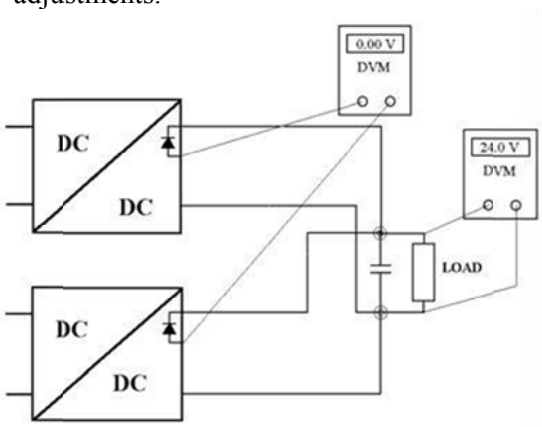

Figure 6. *Adjusting output voltage measure at +Test or pin 8 on the H15 connector.*

3. To **increase** the output voltage.
   Increase the output voltage by turning the potentiometer marked "V.ADJ" clockwise on the unit with the lowest output voltage until you reach the desired voltage at the load or until the output voltage does not increase anymore (as the unit is in current limit). To find the unit with the lowest output voltage you can measure the voltage difference before the series diode, as in *Figure* 6.
   Repeat from i. until you reach the desired output voltage at the load.

4. To **decrease** the output voltage.
   i. Decrease the output voltage by turning the potentiometer marked "V.ADJ" counter clockwise on the unit with the highest output voltage until you reach the desired voltage at the load or until the output voltage does not decrease anymore (as the other units supply all current). To find the unit with the highest output voltage, measure the voltage difference before the series diode, as in *Figure 6.*
   ii. Repeat from i. until you reach the desired output voltage at the load.
5. To achieve good current sharing, adjust all converters so that the voltage difference before the series diode is 0.00 V between all units that are connected in parallel and so that the voltage at the load is still the desired.

5 Multiple loads at the output

If you are using several loads, we recommend fusing them separately with fast acting fuses. Some considerations regarding short-circuits should be taken.

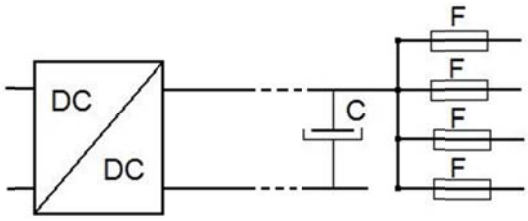

Figure 7. *Connecting multiple loads.*

5.1 Short-circuits

1. If there is a short circuit in one branch and the total current in all branches **does not exceed 105%** of the nominal current of the converter (see label on front panel), the output voltage will not be affected. The time for the fuse to blow can be calculated from the data sheet of the fuse if you know the short circuit current trough the fuse.
2. If there is a short circuit in one branch and the total current in all branches **does exceed 105%** of the nominal current of the converter, the output voltage will drop until the fuse is blown.
   Depending on the impedance of the short circuit (whether it is abrupt or merely an overload) and the resistance of the load cables, the effects of a short circuit will vary.

 Copyright 2000-2011

Long cables reduce short-circuit currents, resulting in longer delay until the fuse is blown and hence an increased voltage dip. Light overload does not necessarily result in a blown fuse.

To reduce the voltage drop at short-circuit and if any branch has more than approximately 30% of the total output current of the converter, a large external capacitor is recommended. Such a capacitor will supply the peak current needed to blow the fuse, see *Figure 7.* To calculate the capacitor needed, use the following formula:

C = 1.2 x (IS x Δt) / ΔU

1.2 = Safety margin.
IS = Short-circuit current through the fuse.
Δt = Time before the fuse blows (see data sheet on the fuse).
ΔU = Acceptable voltage dip before the fuse blows.

Example:
You have a 1A fuse with fast characteristic and the short-circuit current is 10 A. The data sheet gives you that Δt = 10 ms. The output voltage is 24 V, and you can accept 10% voltage drop => ΔU = 24 x 0.1= 2.4 V.

The capacitance you need:
C = 1.2 x (IS x Δt) / ΔU = 1.2 x 10 x 0.01 / 2.4 = 50,000 µF

Choose a capacitance with a rated voltage of at least 115% of nominal output voltage of the converter.

Repeat this calculation for all branches and choose the highest capacitance value.

It is sometimes difficult to estimate the short-circuit current when the nature of a fault is unknown. In this case a voltage dip might appear under some short-circuit conditions even with a large capacitor present. If a voltage dip is critical in one branch it is recommended to use a separate DC/DC converter supplying this branch.

6 Output voltage sense, option S.

The remote voltage sense is used to improve the regulation at the load. The voltage regulation is moved to a point outside the converter where the sense is connected. Longer sense leads than 3 m is not recommended. The voltage difference between the load and the converter should not be larger than the output voltage range. Use twisted sense wires, *see Figure 8.*

The sense leads must always be connected to respective pole, even if not used externally. The sense cannot be used in a paralleled system, described in *section 4.*

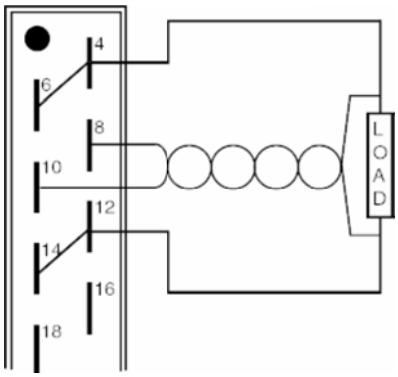

Figure 8. *Remote sense connection.*

7 Output over voltage protection OVP

7.1 Standard feature

In case the regulation circuit fails on the output, a secondary regulation circuit limit the output voltage level. The circuit also protects the converter output from external voltages. The trigger voltage is set to 115% to 120% of the nominal voltage. The circuit is active as long as the over voltage condition remains.

7.2 OVP option A

An independent circuit using a SCR thyristor is used as over voltage protection. When activated it short circuits the output. Reset a trigged OVP by switching off and on the input voltage.
The circuit protects the converter from high external voltages as well as regulation failures

 Copyright 2000-2011

of the unit. The OVP trigger voltage is set to 115% to 120% of the nominal voltage. OVP is standard on all 5 V master outputs and will trigger at max. 6.2 V.

8 Output low voltage alarm

The alarm circuit monitors the output voltage and trigger when the output voltage become below -10% of nominal output voltage.

8.1 Logic signal alarm

This standard feature consist of an open collector alarm in reference to the output voltage, *see Figure 9*.
The voltage supply to the alarm can be taken from the converter output. It cannot be combined with the alarm relay option.

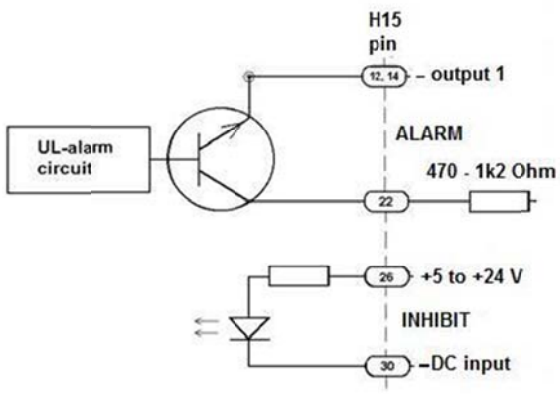

Figure 9. *Alarm and Inhibit pin-out and voltages.*

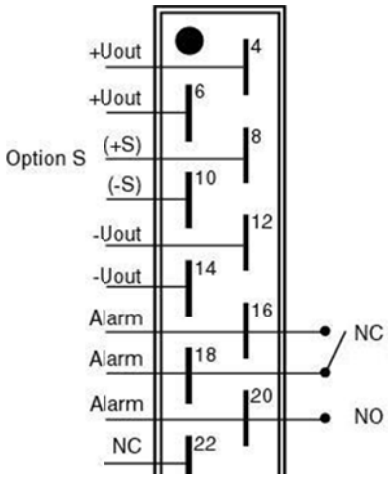

Figure 10. *UL alarm with internal relay. Relay symbol shows Alarm state.*

8.2 Relay output alarm, option B

The alarm has dry contact output with selectable NO, NC function. The relay output is insulated from both input and output 2.5 kVa.c., *see Figure 10.*
The relay is rated 30V 0.5A (a.c. & d.c.).
For higher voltage/current relay rating please contact Polyamp.

The alarm relay can be connected in two ways:

1. Normally Open (NO).
   Connect twisted-pair (0.25 mm^2 -0.5 mm^2) from centre pin of the removable alarm connector and connector pin marked ”NO”.
2. Normally Closed (NC).
   Connect twisted-pair (0.25 mm^2 - 0.5 mm^2) from centre pin of the removable alarm connector and connector pin marked ”NC”.

9 Inhibit input, remote switch off

To stop the converter, an external voltage 5 to 24 V shall be applied between pin 26 and input zero (pin 30), *see Figure 9.*
Do not use the output voltage to supply the inhibit function.

10 Higher isolation voltage, option E1 & E2

E1 is 2 to 2.5 kVa.c. 1 minute between input and output, input and case. On PSC series with input ranges from 110 to 440 and C, D, E input ranges this is a standard feature.
The emission level is increase to level A.
E2 is 2 to 2.5 kVa.c. 1 minute between output and case. The emission level is increase to level A.

 Copyright 2000-2011

11 Insulation voltage test

Each converter has been isolation tested in factory before delivery. Please note that consecutive insulation test damage the Y-capacitors and affect the EMC performance of the unit. We ask you therefore to minimize or completely avoid such test.

The isolation voltage is 2 kVd.c. between input and output, input and case on models with input code A, B, 24, 48.
On models with input code C,110, 220 and D the insulation voltage is 2.5 kVa.c between input and output, input and case (Option E1).
The output to case isolation is 2 kVd.c. on all models. Option E1 and E2 can increase this isolation, *see section 10.*
If your isolation test equipment cannot supply the AC current, you can perform a DC isolation test with 4000 Vd.c (2500 V x √2 x 1.1 ≈ 4000 Vd.c where 1.1 = safety factor).

Warning!

An insulation test shall only be performed by personnel aware of the dangers and hazards of the test.

11.1 DC isolation test output to case

1. Disconnect all cables from the converter.
2. Connect the input terminals of the converter to case.
3. Connect the output terminals together.
4. Connect your isolation tester between output and case. See *Figure 11*. Raise the voltage of the isolation tester from 0 to 2000 Vd.c. (With option E2 0 V to 4000 Vd.c.) Check that the leakage current does not exceed 5 µA. The voltage should not be applied for more than a few seconds or the Y-capacitors might be damaged.
5. Turn off the isolation tester and discharge the test voltage with a 10 MΩ resistor between output and case.

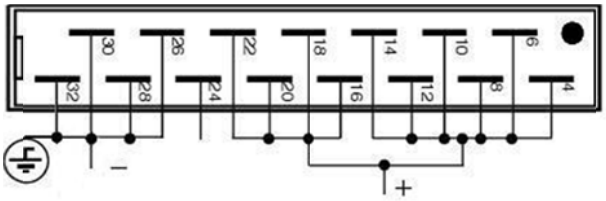

Figure 11. *Output to case isolation voltage test.*

11.2 AC isolation test output to case, option E2

Beware of the rather high capacitive earth currents (about 100 mA) that will occur during this test.

1. Disconnect all cables from the converter.
2. Connect the input terminals of the converter to case.
3. Connect the output terminals together.
4. Connect your isolation tester between output and case. See *Figure 11*.
5. Raise the voltage of the isolation tester from 0 to 2500 Va.c. The voltage should not be applied for more than one (1) minute or the Y-capacitors might be damaged.
6. Turn off the isolation tester and discharge the test voltage with a 10 MΩ resistor between output and case.

 Copyright 2000-2011

Warning!

An insulation test shall only be performed by personnel aware of the dangers and hazards of the test.

11.3 DC isolation test input to output and input to case

1. Disconnect all cables from the converter.
2. Connect the output terminals of the converter to case. See *Figure 12*.
3. Connect the input terminals together.
4. Connect your isolation tester between input and case. See *Figure 12*.
5. Raise the voltage of the isolation tester from 0 to 4000 Vd.c. Check that the leakage current does not exceed 5µA. The voltage should not be applied for more than a few seconds or the Y-capacitors might be damaged.
6. Turn off the isolation tester and discharge the test voltage with a 10 MΩ resistor between input and case.

11.4 AC isolation test input to output and input to case

Beware of the rather high capacitive earth currents (about 100 mA) that will occur during this test.

1. Disconnect all cables from the converter.
2. Connect the output terminals of the converter to case. See *Figure 12.*
3. Connect the input terminals together.
4. Connect your isolation tester between input and case. See *Figure 12* Raise the voltage of the isolation tester from 0 to 2500 Va.c. The voltage should not be applied for more than one (1) minute or the Y capacitors might be damaged.
5. Turn off the isolation tester and discharge the test voltage with a 10 MΩ resistor between input and case.

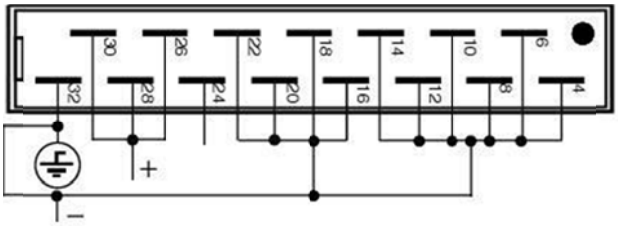

Figure 12. *Input to output and input to case isolation voltage test.*

12 Trouble shooting

12.1 There is no or wrong output voltage

1. Check that the input fuse is not broken.
2. Check that the input voltage polarity is correct.
3. Check that the input voltage is within the specified limits.
4. The DC/DC converter output may be in current limit due to excessive output current or an external short-circuit on the output.
   - Measure the output voltage. If shows > 0.5 V the thyristor OVP, *see section 7.2*, might have trigged.
   - Disconnect the input by removing the fuse.
   - Disconnect the load.
   - Connect input fuse again and measure the output voltage. If the converter now starts, the load is to high or there is a short circuit on the load side.
   - If there is an external short-circuit, remove it.
   - If the load is too large decrease the load or consult your Polyamp dealer.
5. The unit is broken. Contact your Polyamp dealer.

12.2 The input fuse blows when the input is connected

1. Check that the input voltage polarity is correct.
2. Check that the input fuse is of time delay type and with correct current rating. See *Table 1 and 2*.
3. The unit is broken. Contact your Polyamp dealer.

12.3 The converter starts and stops repeatedly

All models have an over/under voltage protection, which shuts down the converter if the input voltage is not within specified limits:

1. The cables to the converter input may be under-sized, causing too high voltage drop in the supply cables.
2. Your supply does not have enough current capacity so the input voltage to the converter drops below specified limit.

12.4 Fault report

We do not recommend you to repair a faulty unit. All unit opened by customer will not be repaired under warranty.

Please use our RMA system from our webpage www.polyamp.com

Warranty
All Polyamp DC/DC converters are warranted against defective material and workmanship. This warranty is valid for 24 months from the date of delivery. We will repair or replace products which prove to be defective during the warranty period. The warranty is valid only if the converter is used within specification.

Please describe the conditions when the fault occurred and please return a faulty converter to:

Your local distributor or:

SWITCH CRAFT S.A.
Bel Air 63
CH-2300 La Chaux-de-Fonds
Switzerland

Tel: +41 32 9678800
Fax: +41 32 9678809
e-mail: info@switchcraft.ch

Latest version of this manual
www.polyamp.com

 Copyright 2000-2011